# PL6A02B

## 2.4/5.0 GHz ISM Screw Mount

## Key Features

**2.4/5.0 GHz ISM**
- 2410-2490 MHz
- 4920-5925 MHz

Screw Mount
Anti-Rotation Mechanism
Ground Plane Independent
Customizable Cable and Connector
IP67, IK09, IP69K
Dimensions Ø 77.3 × 65.5 mm

**Note:** Antenna is isolated from ground plane to provide common mode surge protection up to 6kV

## 1. Antenna and electrical specifications

| Parameters | 2.4/5.0 GHz ISM Antenna | |
|---|---|---|
| Standards | WiFi, BT, ZigBee, ISM | |
| Band (MHz) | 2.4 GHz | 5.0 GHz |
| Frequency (MHz) | 2410-2490 | 4920-5925 |
| Return Loss (dB) | ~-11.3 | ~-12.4 |
| VSWR | ~1.8:1 | ~1.8:1 |
| Efficiency (%) | ~50.5 | ~48 |
| Peak Gain (dBi) | ~2.6 | ~4.4 |
| Average Gain (dB) | ~-3.0 | ~-3.2 |
| Impendance (Ohm) | 50 | |
| Polarisation | Linear | |
| Radiation Pattern | Omni-Directional | |
| Max. Input Power (W) | 25 | |
| Connector Type | SMA-Male Standard (Other Connectors Available) | |
| Cable Length | 300 cm Standard (Any Cable Length Available) | |
| Cable Type | LMR195 Standard (Other Cables Available) | |

**Antenna Measurement Conditions:**

Mounted on Metal Plate of 30 x 30 cm

200 cm of Cable LMR195

Measured in Certified CTIA 3D Anechoic Chamber

## 2. Mechanical and environmental specifications

| Specifications | PL6A02B |
|---|---|
| Mounting Type | Screw Mount |
| Dimensions (mm) | Ø 77.3 × 65.5 |
| Radome | ASA |
| Radome color | Black or White |
| Antenna Base | Zamak |
| Gasket | TPE |
| Operating Temperature (C) | -40 to +85 |
| Storage Temperature (C) | -40 to +85 |
| Substance Compliance | RoHS |
| Certificates | IP67, IK09, IP69K |

## 3. Antenna parameters

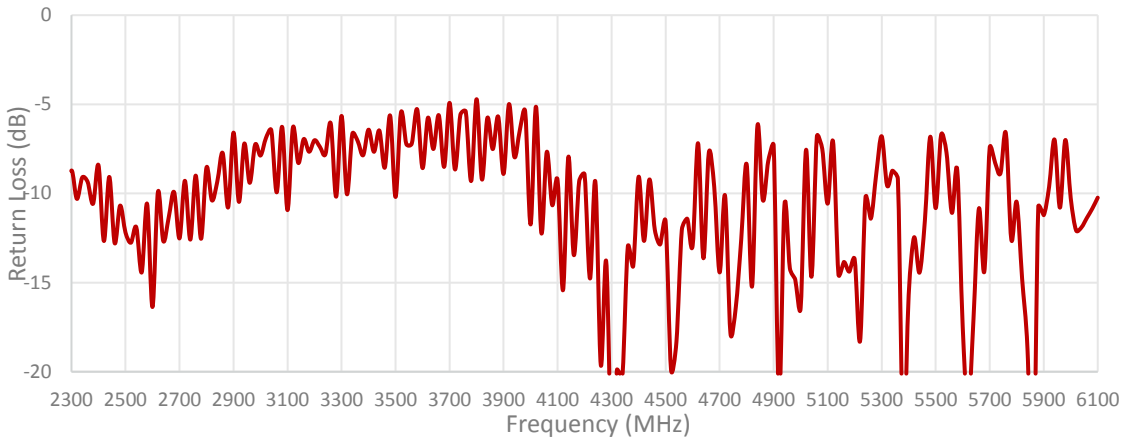


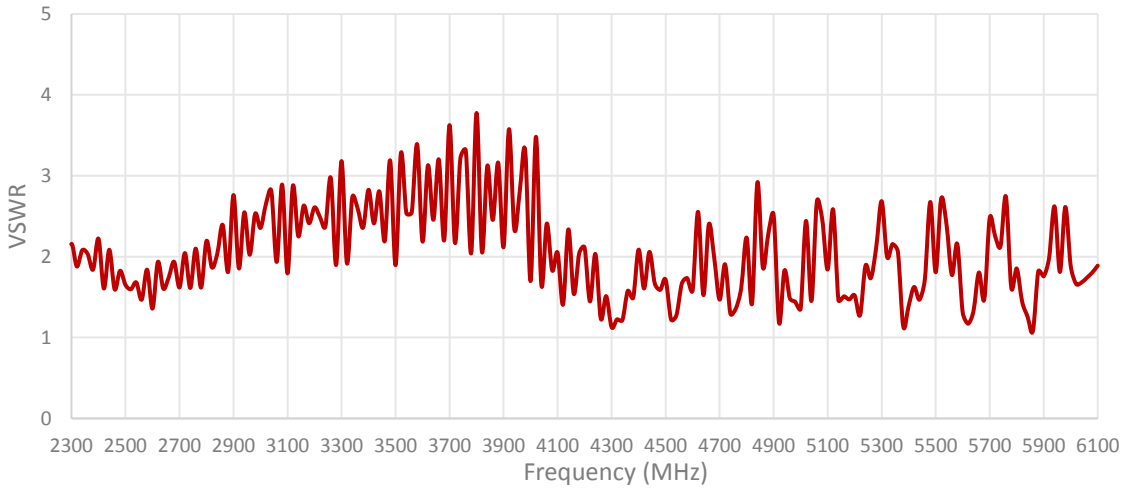

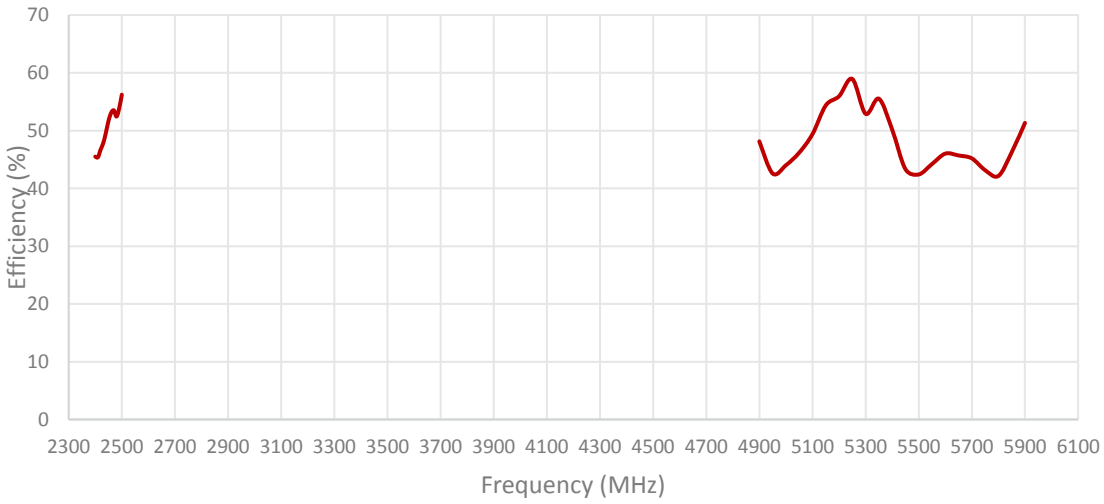
70
60
50
40
30
20
10
0
Efficiency (%)
2300 2500 2700 2900 3100 3300 3500 3700 3900 4100 4300 4500 4700 4900 5100 5300 5500 5700 5900 6100
Frequency (MHz)

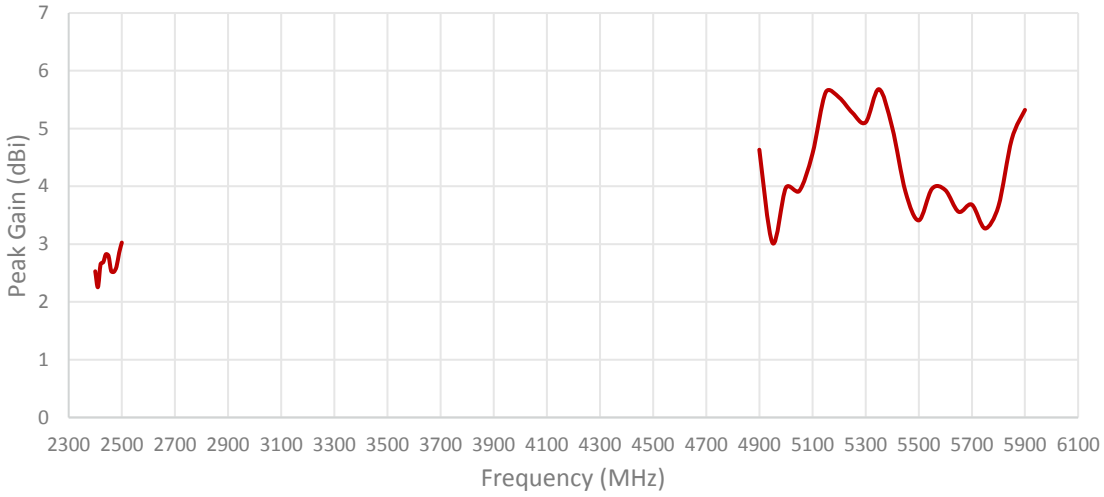
7
6
5
4
3
2
1
0
Peak Gain (dBi)
2300 2500 2700 2900 3100 3300 3500 3700 3900 4100 4300 4500 4700 4900 5100 5300 5500 5700 5900 6100
Frequency (MHz)

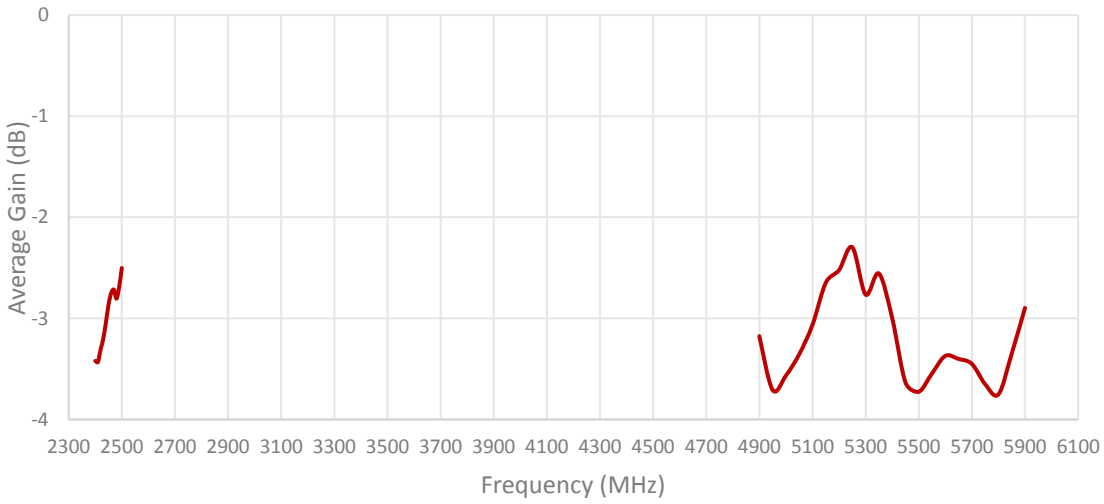


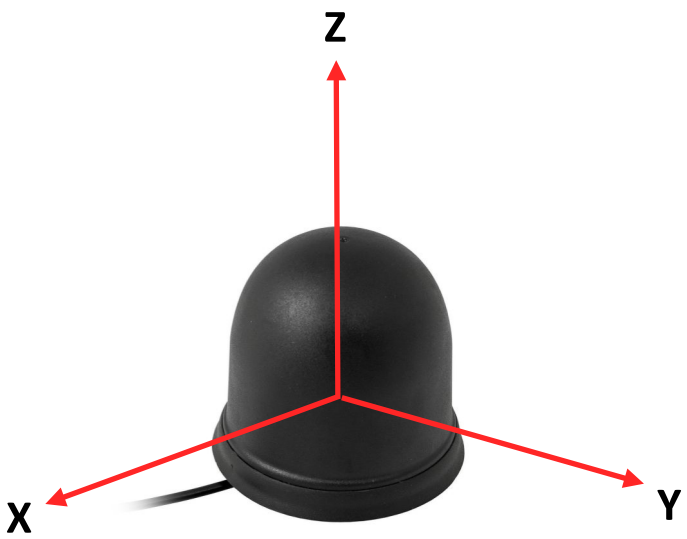


Radiation pattern reference

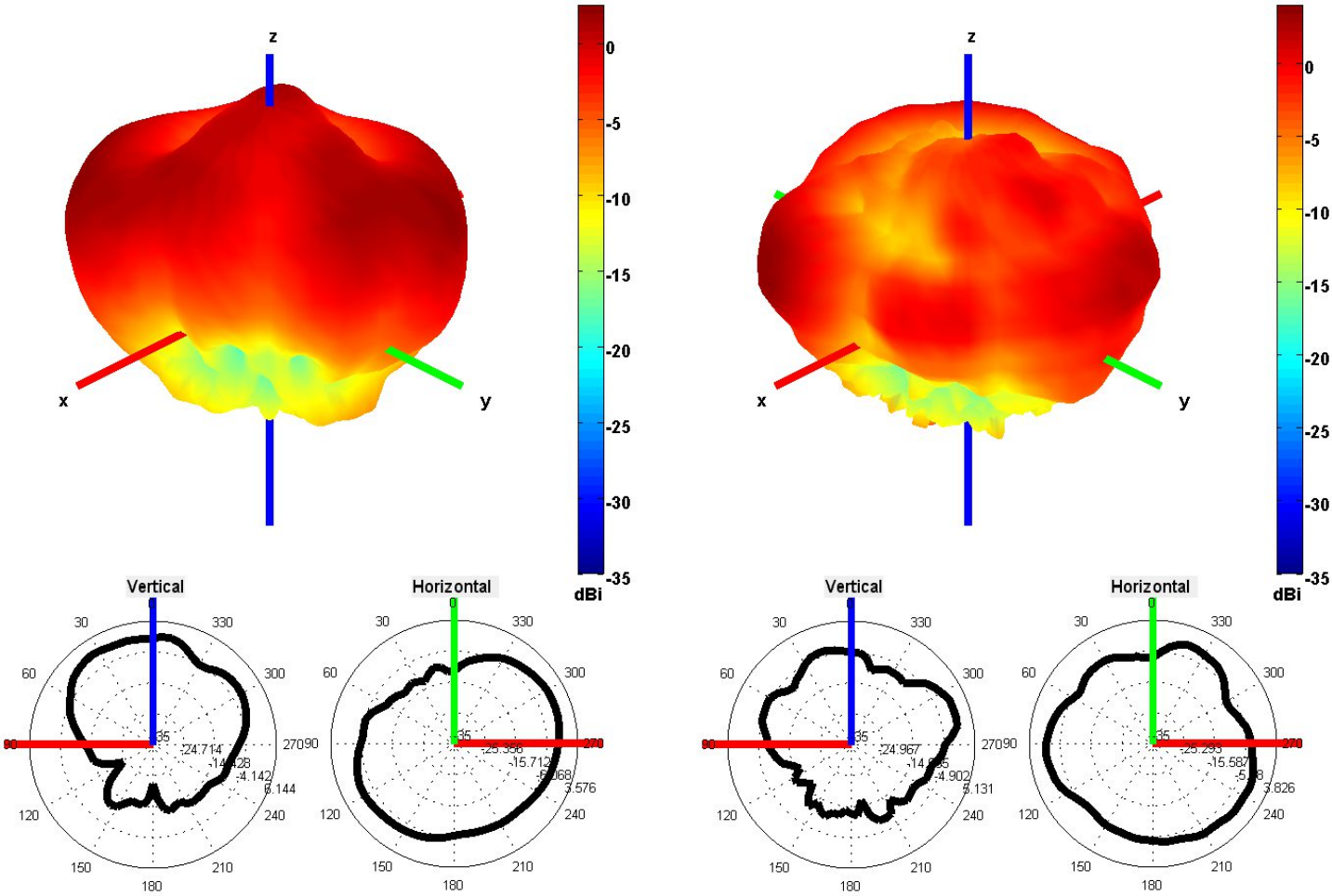


2450 and 5500 MHz Radiation pattern

## 4. Antenna drawings

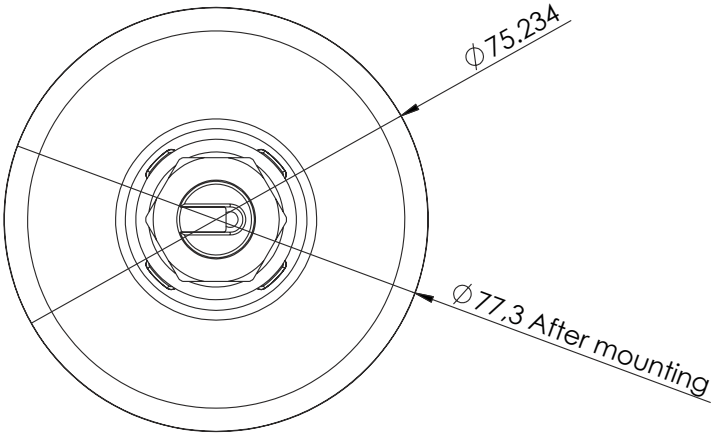


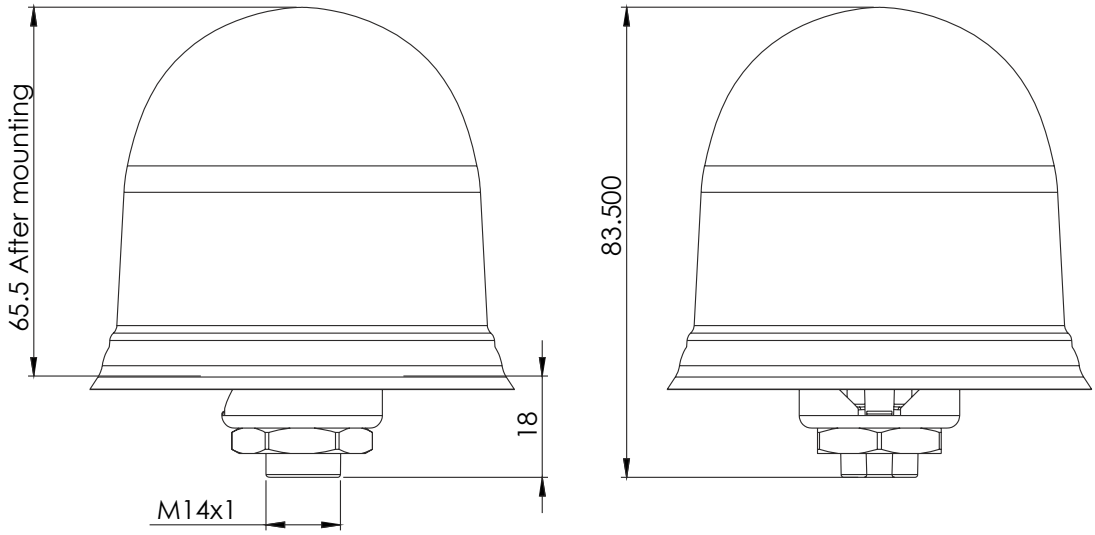

## 5. Antenna Images